Measurements

ORIGO DV WITH SIDE GLASS

Nordpeis

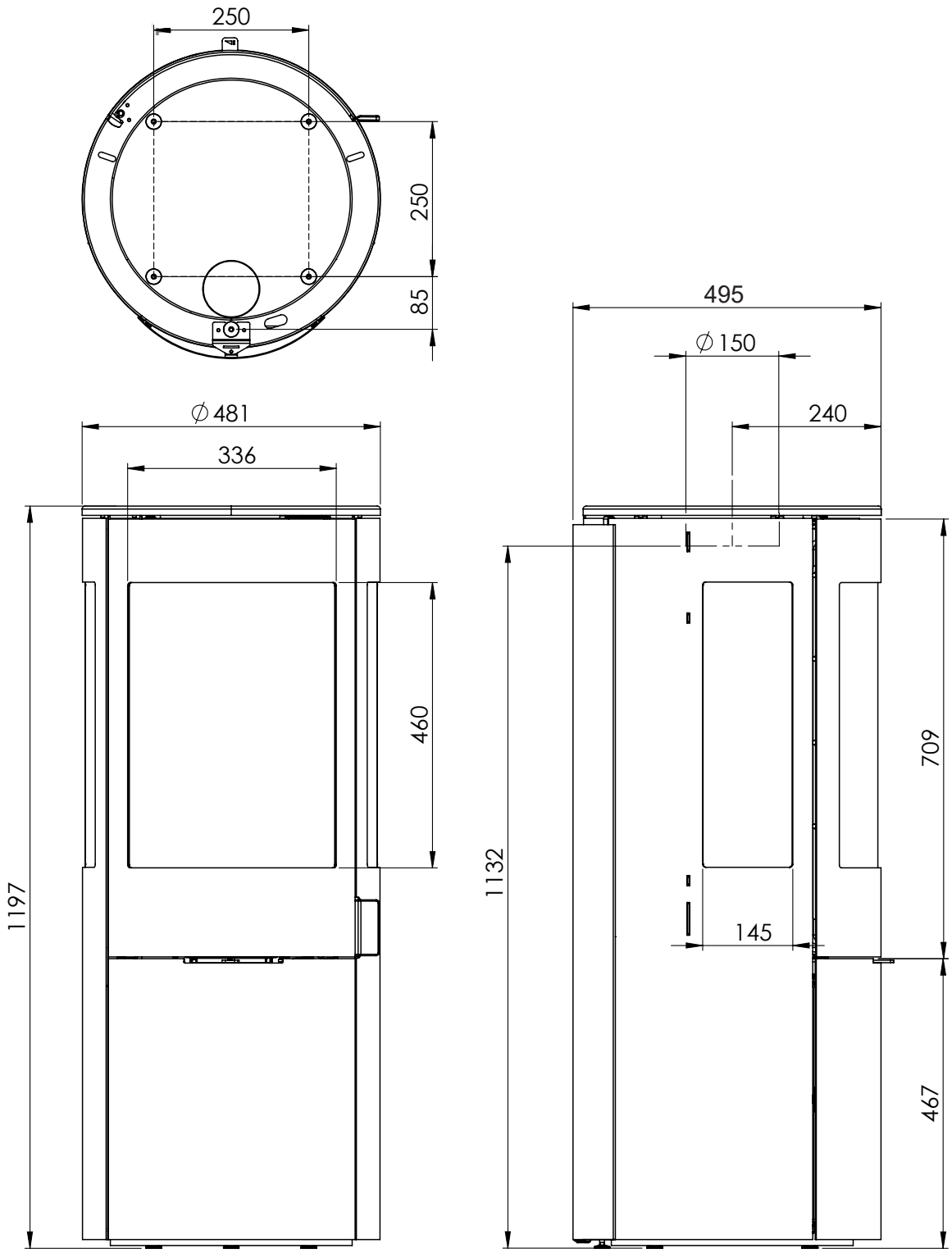

Measurements

ORIGO HIGH DV WITH SIDE GLASS

Nordpeis

